# COMMERCIAL DATA SHEET

## Quadra Twin Plus 15 XL & Paddle

Boiling | Chilled

## Billi Quadra Twin Plus 15 with XL Levered Dispenser & Paddle Mixer

Enjoy all the space saving benefits of Billi's water-cooled boiling and chilled Quadra systems PLUS TWO separate sink mixers to ensure safety and enhanced convenience for all users.

Requiring only cold feed mains supply, the Quadra Twin Plus mixes it's own hot water without the need for any additional under-bench space requirements or boosters.

Quadra Twin Plus models require no joinery ventilation and no more space than a standard Quadra boiling and chilled unit. Supplied standard with a DDA compliant XL levered drinking water dispenser and two 6-star rated lever paddle mixer taps, the solution is both functional and appealing.

### Features

- Australian Designed & Made
- Space Saving Design
- Energy Efficient
- No Ventilation Required
- Water-Cooled Technology
- Heat Exchange Technology
- Smart Safety

XL Levered Dispenser

2 x Paddle Lever Mixers

Quadra Plus Under-Bench Unit

### Product Specifications

| | |
|---|---|
| Water Type | BCHA |
| Product Code | 904107LP |
| Model Name | Quadra Twin Plus 15 |
| 50° hot water capacity litres (initial drawdown) | 15 |
| 50° hot water delivery litres per hour | 85 |
| Boiling water delivery (cups per hour)* | 250 |
| Chilled & Sparkling water delivery (cups per hour) | 175 |
| Power supply (amps) | 15 |

*Based on the initial number of cups of boiling water immediately available, drawn one cup every 10 seconds. For all underbench filtered water systems, consideration may be needed for usage patterns and draw-off methods. 1 cup = 170ml

### Finishes

Add the Finish code to the Product Code to finalise your specification, eg. 904105LPMB

Standard Finishes

**CH:** CHROME | **BR:** BRUSHED | **MB:** MATTE BLACK | **MW:** MATTE WHITE

Special Finishes

**UB:** URBAN BRASS | **GM:** GUN METAL

### Accessories

**992800** - 70 mm Riser & Font

**992820** - 70 mm Riser

**992803** - 120 mm Riser & Font

**992830** - 120 mm Riser

**990714** - Tubing Extension Kit for Plus unit - 1.8 mtrs

**FREE to access**

Scan the QR code access our Revit families on

**bimstore**

## Technical Drawing

### Dispenser

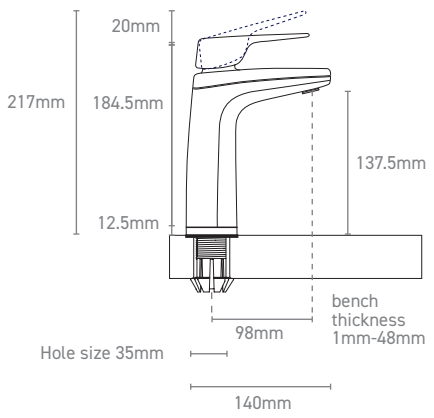


### Mixer

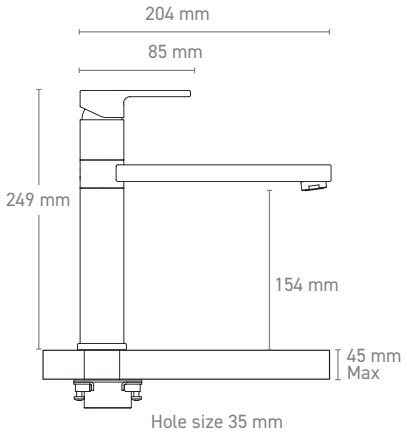


### Unde-bench Unit

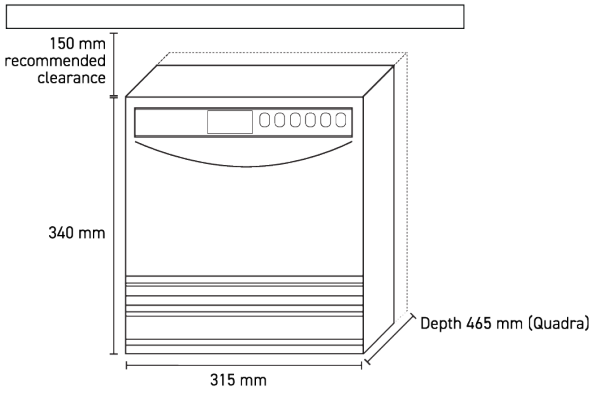


## Installation Requirements

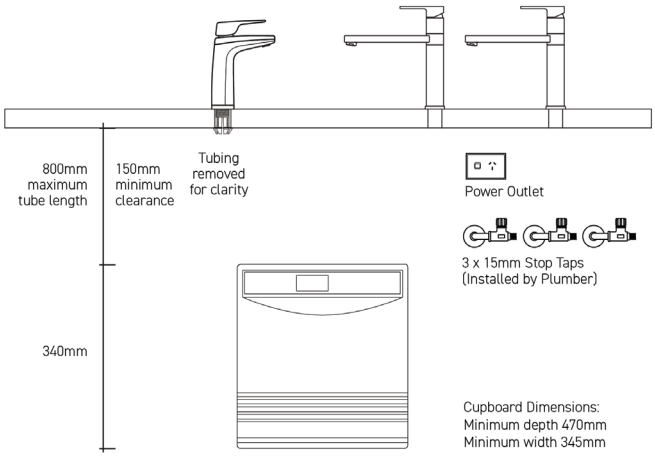


## Installation Notes

| | |
|---|---|
| **Water connections** | Three (3) 1/2" BSP (15 mm) stop-taps with male threads - one cold water supply to Quadra Plus and two cold water supply to Sink.<br><br>Mixer - should be installed in an easily accessible position.<br><br>Water supply must be microbiologically safe to drink, with a dynamic pressure of 250kPa at each outlet. |
| **Power supply** | A standard 15 amp power outlet is required, no further than 1000 mm from the underbench unit. The system is supplied with a 1 metre flex cord and plug. |
| **Filtration** | Billi's range of premium filters utilise BWT's unique Fibron X technology. Billi's filter range provides superior taste, water quality, consistent filter life and peace of mind when it comes to hygiene.<br><br>Filter supplied: 994051 (5 micron). Replacement filters available: 994052 (0.2 micron), 994054 (HSD), 994055 (XPHSD), 994056 (Sediment only) and 994060 (0.2 micron sediment only). |

Lead Free

Please scan the QR code for all support information.


**Billi Australia Pty Ltd**
P 1800 812 321
W www.billi.com.au

**Billi New Zealand Ltd**
P 0800 636 0 636
W www.billi.co.nz


Billi®