COMMERCIAL DATA SHEET

Quadra Twin Plus 21 XL & Gooseneck

Boiling | Chilled

Billi Quadra Twin Plus 21 with XL Levered Dispenser & Gooseneck Mixer

Enjoy all the space saving benefits of Billi's water-cooled boiling and chilled Quadra systems PLUS TWO separate sink mixers to ensure safety and enhanced convenience for all users.

Requiring only cold feed mains supply, the Quadra Twin Plus mixes it's own hot water without the need for any additional under-bench space requirements or boosters.

Quadra Twin Plus models require no joinery ventilation and no more space than a standard Quadra boiling and chilled unit. Supplied standard with a DDA compliant XL levered drinking water dispenser and two 6-star rated round gooseneck mixer taps, the solution is both functional and appealing.

Features

- Australian Designed & Made
- Space Saving Design
- Energy Efficient
- No Ventilation Required
- Water-Cooled Technology
- Heat Exchange Technology
- Smart Safety

XL Levered Dispenser

2 x Gooseneck Mixers

Quadra Plus Under-Bench Unit

Product Specifications

Water Type	BCHA
Product Code	904187LG
Model Name	Quadra Twin Plus 21
50° hot water capacity litres (initial drawdown)	21
50° hot water delivery litres per hour	100
Boiling water delivery (cups per hour)*	350
Chilled & Sparkling water delivery (cups per hour)	175
Power supply (amps)	20

*Based on the initial number of cups of boiling water immediately available, drawn one cup every 10 seconds. For all underbench filtered water systems, consideration may be needed for usage patterns and draw-off methods. 1 cup = 170ml

Finishes

Add the Finish code to the Product Code to finalise your specification, eg. 904107LGMB

Standard Finishes

CH: CHROME | **BR:** BRUSHED | **MB:** MATTE BLACK | **MW:** MATTE WHITE

Special Finishes

UB: URBAN BRASS | **GM:** GUN METAL

Accessories

992800 - 70 mm Riser & Font

992820 - 70 mm Riser

992803 - 120 mm Riser & Font

992830 - 120 mm Riser

990714 - Tubing Extension Kit for Plus unit - 1.8 mtrs

FREE to access

Scan the QR code access our Revit families on

bimstore

Technical Drawing

Dispenser

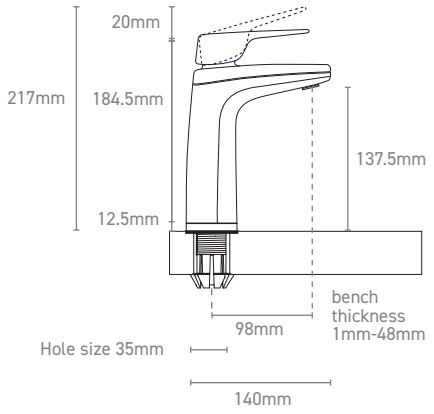

Mixer

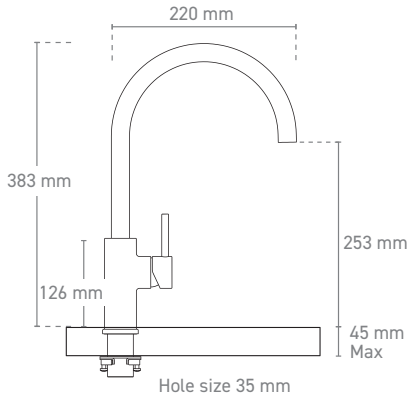

Unde-bench Unit

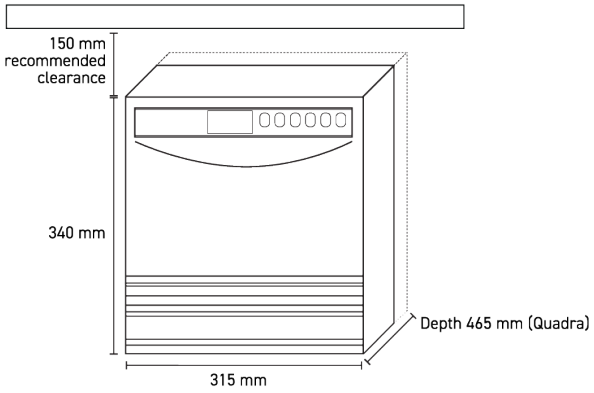

Installation Requirements

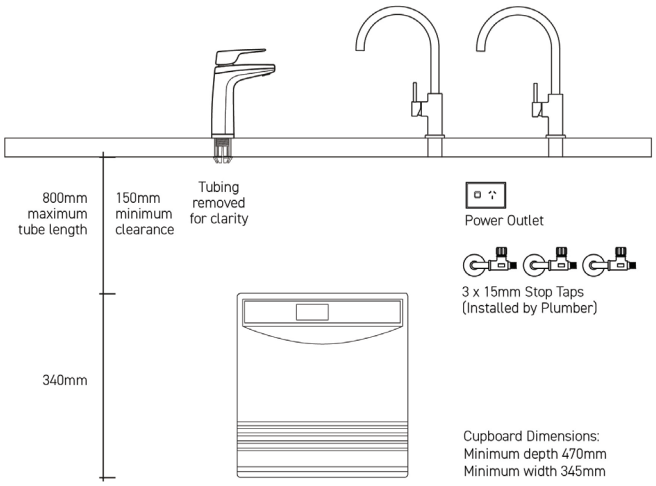

Installation Notes

Water connections	Three (3) 1/2" BSP (15 mm) stop-taps with male threads - one cold water supply to Quadra Plus and two cold water supply to Sink Mixer - should be installed in an easily accessible position. Water supply must be microbiologically safe to drink, with a dynamic pressure of 250kPa at each outlet.
Power supply	A standard 15 amp power outlet is required, no further than 1000 mm from the underbench unit. The system is supplied with a 1 metre flex cord and plug.
Filtration	Billi's range of premium filters utilise BWT's unique Fibron X technology. Billi's filter range provides superior taste, water quality, consistent filter life and peace of mind when it comes to hygiene. Filter supplied: 994051 (5 micron). Replacement filters available: 994052 (0.2 micron), 994054 (HSD), 994055 (XPHSD), 994056 (Sediment only) and 994060 (0.2 micron sediment only).

Lead Free

Please scan the QR code for all support information.

Billi Australia Pty Ltd
P 1800 812 321
W www.billi.com.au

Billi New Zealand Ltd
P 0800 636 0 636
W www.billi.co.nz

Billi®