COMMERCIAL DATA SHEET

Quadra Plus 21 XR & Square Mixer

Boiling | Chilled

Billi Quadra Twin 21 with XR Remote Dispenser & Square Mixer

Enjoy all the space saving benefits of Billi's water-cooled boiling and chilled Quadra systems PLUS TWO separate sink mixers to ensure safety and enhanced convenience for all users.

Requiring only cold feed mains supply, the Quadra Twin Plus mixes it's own hot water without the need for any additional under-bench space or boosters.

Quadra Twin Plus models require no joinery ventilation and no more space than a standard Quadra boiling and chilled unit. Supplied standard with the innovative and thoughtful XR remote control panel drinking water dispenser and two 6-star rated square gooseneck mixer taps, the solution is both functional and appealing.

Features

- Australian Designed & Made
- Space Saving Design
- Energy Efficient
- No Ventilation Required
- Water-Cooled Technology
- Heat Exchange Technology
- Smart Safety

XR Remote Dispenser

2 x Square Mixers

Quadra Plus Under-Bench Unit

Product Specifications

Water Type	BCHA
Product Code	904187RS
Model Name	Quadra Twin Plus 15
50° hot water capacity litres (initial drawdown)	21
50° hot water delivery litres per hour	100
Boiling water delivery (cups per hour)*	350
Chilled & Sparkling water delivery (cups per hour)	175
Power supply (amps)	20

* Based on the initial number of cups of boiling water immediately available, drawn one cup every 10 seconds. For all underbench filtered water systems, consideration may be needed for usage patterns and draw-off methods. 1 cup = 170ml

Finishes

Add relevant Finish Code to the Product code to complete your specification eg. 904187RSCH

Standard Finishes

CH:
CHROME

Accessories

992800 - 70 mm Riser & Font

992820 - 70 mm Riser

992803 - 120 mm Riser & Font

992830 - 120 mm Riser

990714 - Tubing Extension Kit for Plus unit - 1.8 mtrs

FREE to access
Scan the QR code access our Revit families on
bimstore

Technical Drawing

Dispenser

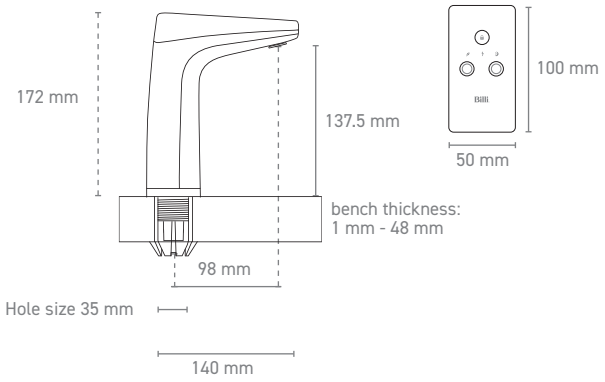

Mixer

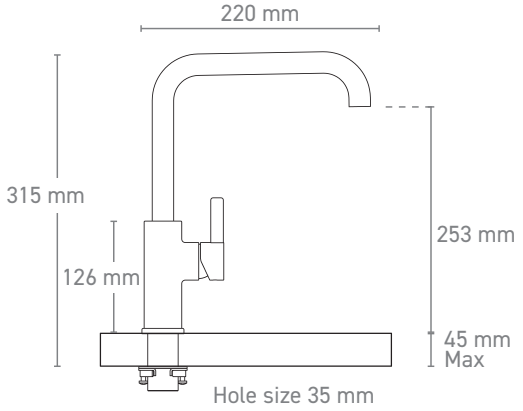

Unde-bench Unit

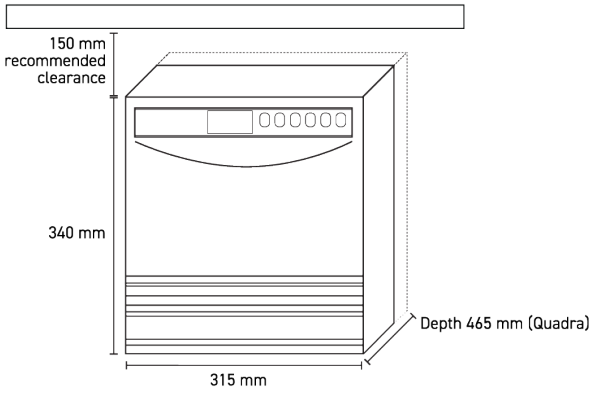

Installation Requirements

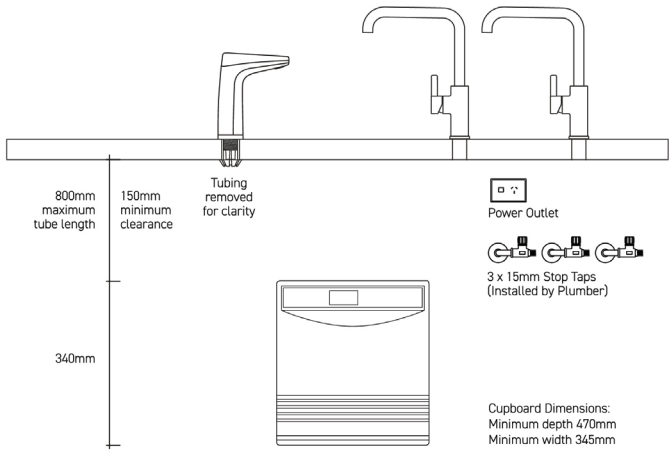

Installation Notes

Water connections	Three (3) 1/2" BSP (15mm) stop-taps with male threads - one cold water supply to Quadra Plus and two cold water supply to Sink Mixer - should be installed in an easily accessible position. Water supply must be microbiologically safe to drink, with a dynamic pressure of 250kPa at each outlet.
Power supply	A standard 20 amp power outlet is required, no further than 1000mm from the underbench unit. The system is supplied with a 1 metre flex cord and plug.
Filtration	Billi's range of premium filters utilise BWT's unique Fibron X technology. Billi's filter range provides superior taste, water quality, consistent filter life and peace of mind when it comes to hygiene. Filter supplied: 994051 (5 micron). Replacement filters available: 994052 (0.2 micron), 994054 (HSD), 994055 (XPHSD), 994056 (Sediment only) and 994060 (0.2 micron sediment only).

Technical support
Book a service call
Filtration & service
Warranty registration

Please scan the QR code for all support information.

Billi Australia Pty Ltd
P 1800 812 321
W www.billi.com.au

Billi New Zealand Ltd
P 0800 636 0 636
W www.billi.co.nz

Billi®